91
D12-24

BULLETIN 1264

FULLY POWERED, SELF-LOADING

FURNCO
POWR-BARROW

RECEIVED MARCH 10, 1967

FOR USE WHEREVER MATERIAL IS TO BE MOVED OR BULK MATERIAL SELF-LOADED, TRANSPORTED AND DUMPED

Furnco *Engineering Co.* 525 Barclay Building
Bala-Cynwyd, Pa. 19004
(215) 839-7204

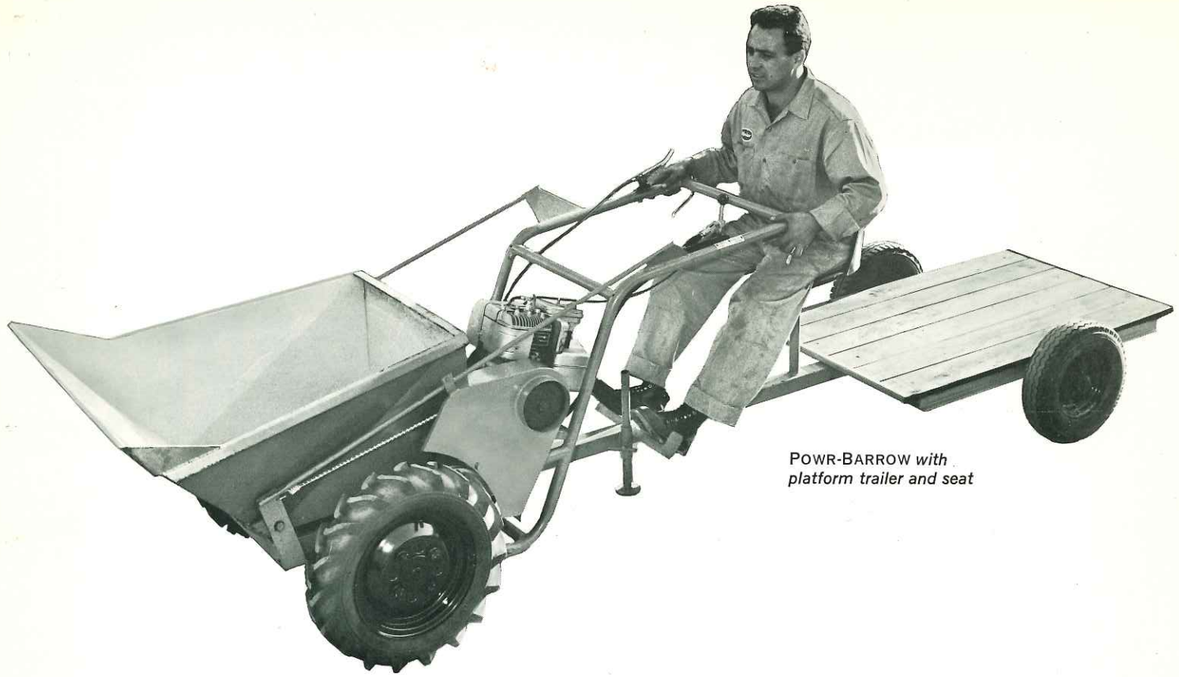

POWR-BARROW *with platform trailer and seat*

THE FURNCO POWR-BARROW

. . . A NEW ADVANCE IN MATERIAL HANDLING

Here's a one-man material handler that offers a whole host of cost- and work-saving features for unlimited applications in the building trades, farming, gardening, public playgrounds, parks and general industry.

The Furnco POWR-BARROW is ideal for use wherever material is to be moved or bulk material self-loaded, transported and dumped.

The versatile Furnco POWR-BARROW is easy to handle; it loads itself, travels, reverses, climbs, and discharges all under power.

You'll be impressed with the ease with which one man can handle 6 cu. ft. of materials over the roughest ground conditions.

The addition of accessory equipment makes the Furnco POWR-BARROW a year-round material handling production tool.

USA Patent No. 3021625

Sulky trailer with seat

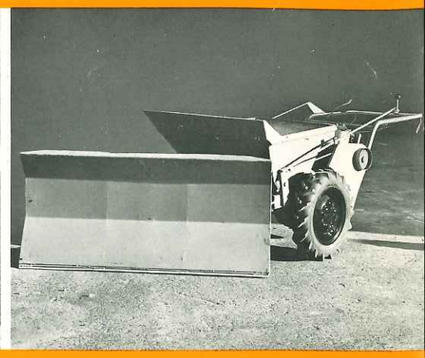

POWR-BARROW *with snow plow*

NOTE THESE POWR-BARROW ACCESSORIES

Seat and Trailer

Specially designed for fast attachment, the trailer consists of a tubular frame mounted on two 16″ x 4″ wheels with rubber tires. A wood platform 30″ x 48″ and a tractor bucket seat are featured. The trailer has a pay-load capacity of 900 lbs. A chassis, with seat only, is also available and is designed to accept other conventional implements for towing.

Snow Plow

The versatility of the POWR-BARROW is still further increased by the addition of a snow plow. The plow blade is easily and quickly fitted by means of three bolts and a pin, the complete job taking no more than three or four minutes. Sufficiently wide to clear the wheels, the blade may be angled to right or left. One man with a POWR-BARROW snow plow can clear a 3 ft. wide path of 300 feet or more in two minutes.

In Addition

A unique locking differential is featured on the POWR-BARROW. Controlled by a finger-tip spring return lever, this differential lock may be engaged momentarily or for long periods as required. This considerably speeds self-loading and gives greater traction where 'going' is soft or rough.

Power self-loading

Power travel

Power climbing

Power discharging

Positive traction over difficult terrain

Check these advantages:

- *Powered Loading*
- *Powered Travel*
- *Powered Climbing*
- *Powered Reversing*
- *Powered Discharging*
- *Independent Braking*
- *Locking Differential*

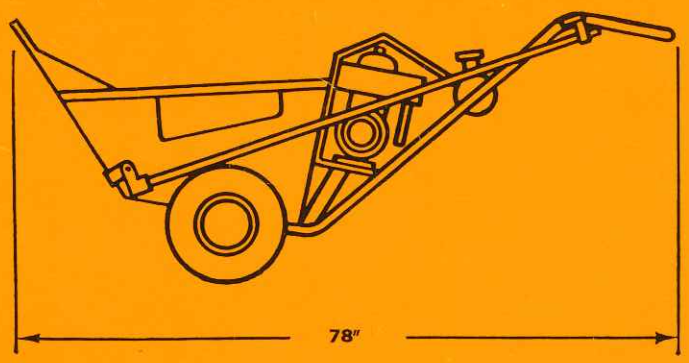

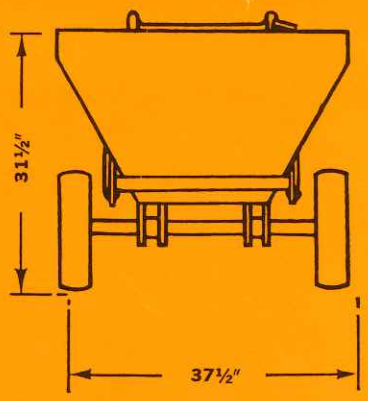

SPECIFICATIONS • FURNCO POWR-BARROW

Capacity	6 cubic feet struck.
Engine	Air cooled, four-stroke gasoline engine developing 3½ hp at 3500 rpm.
Drive	"B" section V-Belt, driven through torque converter, fitted with centrifugal clutch.
Gearbox	Constant mesh spur gear reduction with forward, reverse, and neutral positions. Spur gears and differential sealed in oil-tight housing.
Brake	Hand controlled transmission brake.
Wheels	4.00 x 12, 4-ply tractor/implement tires.
Net Weight	390 lbs.
Dimensions	Length 78"; Height 31½"; Width 37½". Special narrow model 27" wide for narrow aisle and doorway operation. (Capacity 5½ cubic feet.)

3-ft. wide path is easily cleared

Locking differential makes power loading easy

Furnco *Engineering Co.*

525 Barclay Bldg.
Bala-Cynwyd, Pa. 19004
(215) 839-7204

Printed in USA